NOTES:

1) ALL COMPONENT WITH "*" BEFORE PART ID INDICATE NEW PARTS ADDED TO PCB
2) *J10 IS DC POWER JACK TYPE AND SIZE SELECTED TO MATCH WALL-WART PLUG
3) *J11 IS PHILMORE 0.1" POLARIZED LOCKING SOCKET P/N 70-4852 (CABLE USES MATCHING 70-4802 HEAD) USE SAME ON SYM-1 SIDE

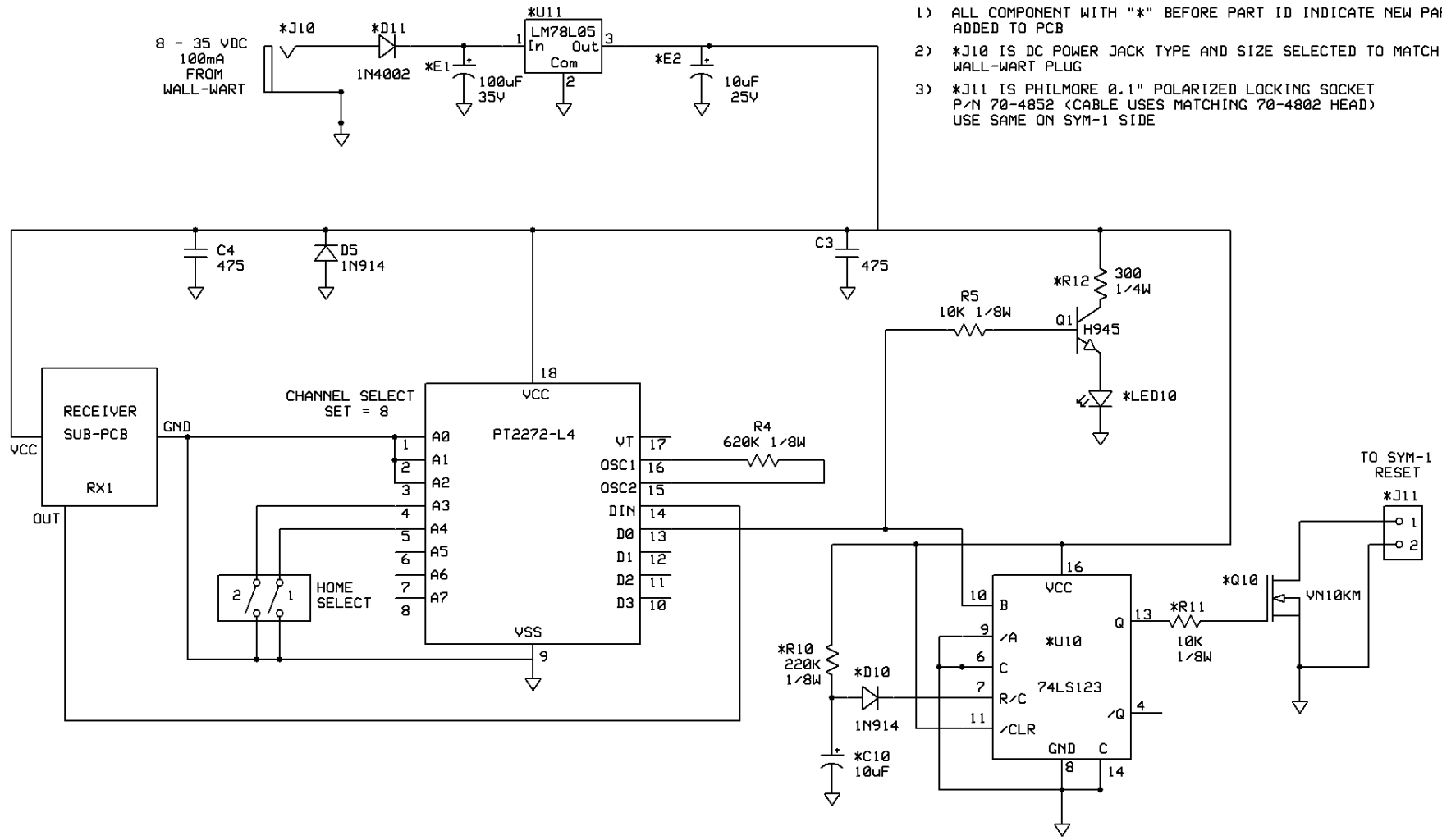

D.A. Buska Engineering LLC		
GE RF100RXPS : SYM-1 RESET MODIFIED		
GE	Rev 1.0 2/24/2011	1/1